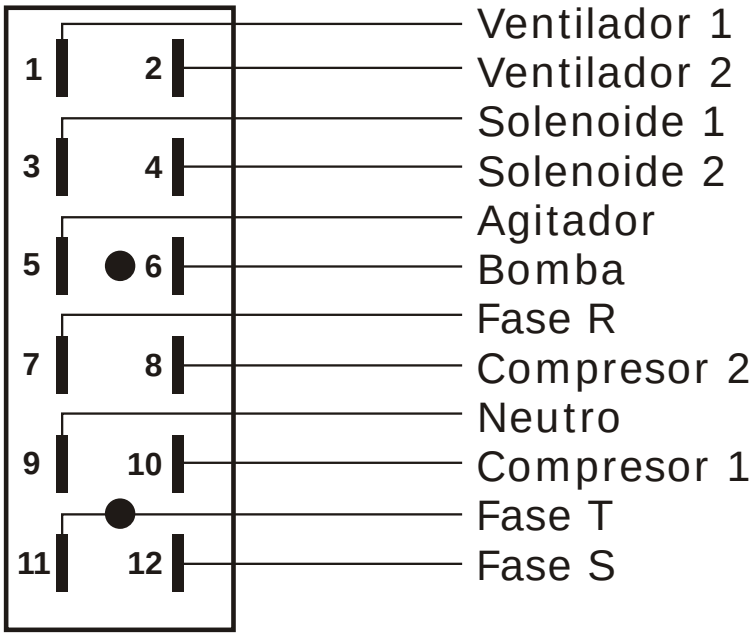

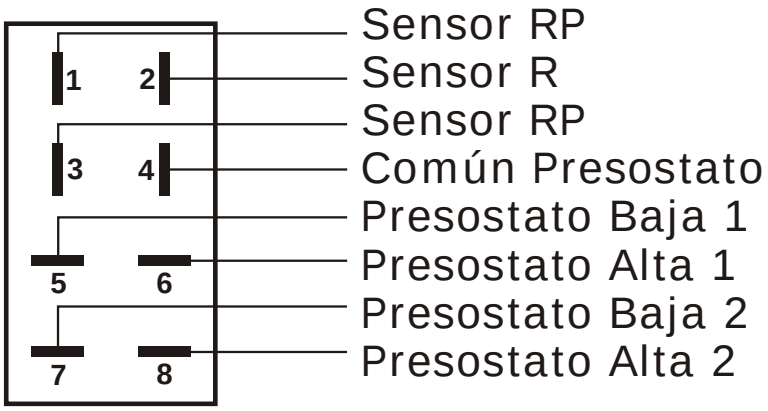

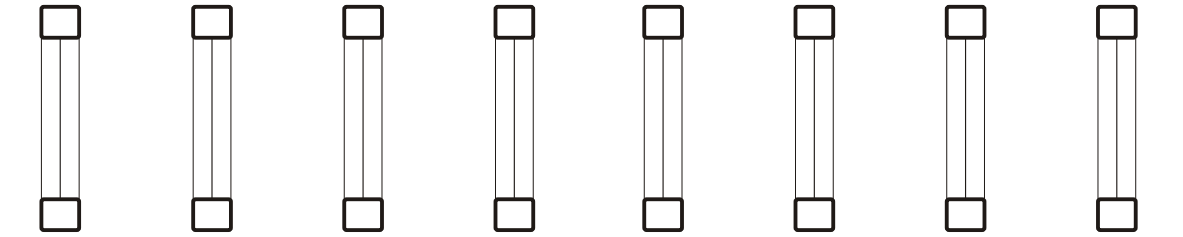

VENT. 1	VENT. 2	SOL. 1	VENT. 2	AGIT.	BOMBA	COMP. 2	COMP. 1
5 Amp	5 Amp	5 Amp	5 Amp	5 Amp	5 Amp	20 Amp	20 Amp

ETIFRIO TRIFASICO